MultiSensor 6 user guide.

Modified on: Wed, 18 Mar, 2020 at 6:07 PM

Aeotec MultiSensor 6.

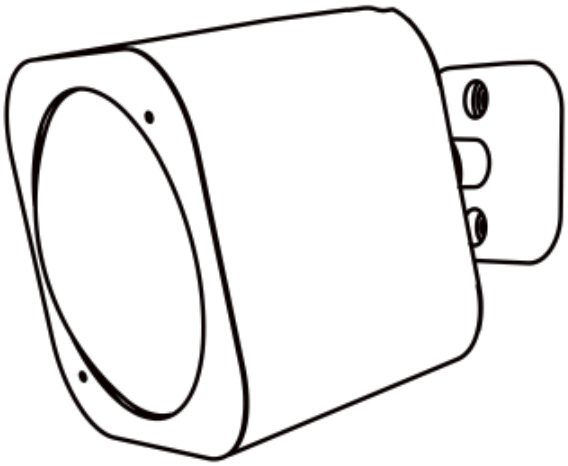

Aeotec MultiSensor 6 was developed to detect ambient values and movement and to transmit them with **Z-Wave Plus (http://aeotec.com/z-wave-plus)**. It is powered by Aeotec's **Gen5 (http://aeotec.com/z-wave-gen5)** technology. You can find out more about MultiSensor 6 by following that link.

To see whether MultiSensor 6 is known to be compatible with your Z-Wave system or not, please reference our **Z-Wave gateway comparison (http://aeotec.com/z-wave-gateways)** listing. The **technical specifications of Multisensor 6 (https://aeotec.freshdesk.com/solution/articles/6000166772-multisensor-6-technical-specifications-)** can be viewed at that link.

Get to Know your MultiSensor.

Your MultiSensor comes packaged with a number of accessories that will help with its installation and operation.

Package Contents:

1. MultiSensor
2. Battery Cover
3. Back-Mount Arm
4. Double-Sided Tape
5. Screws (×2)
6. Micro USB Cable

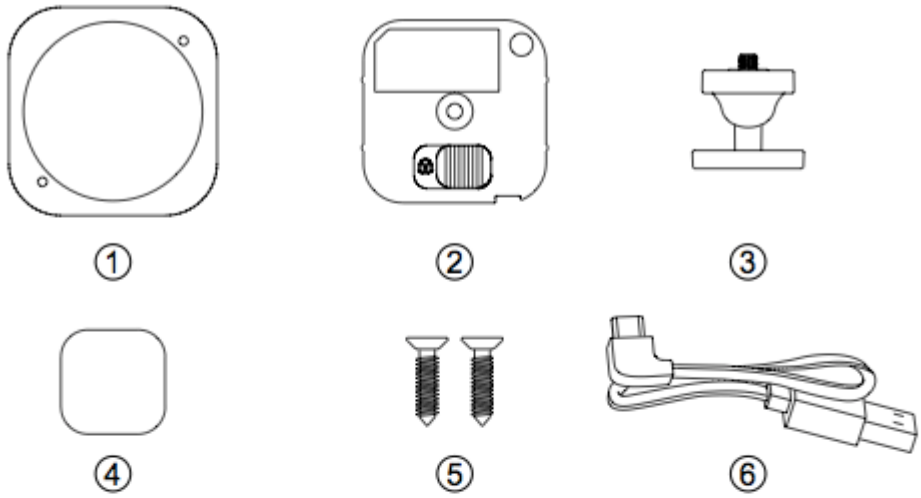

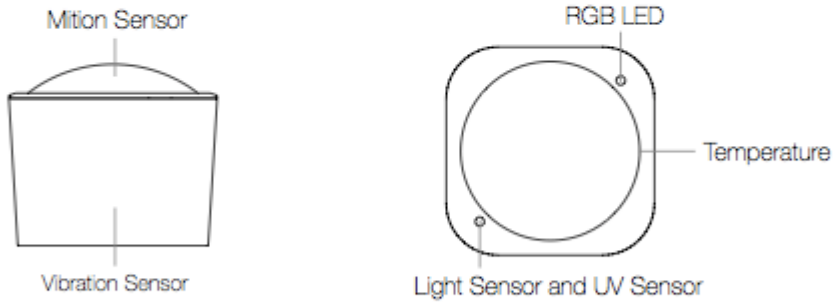

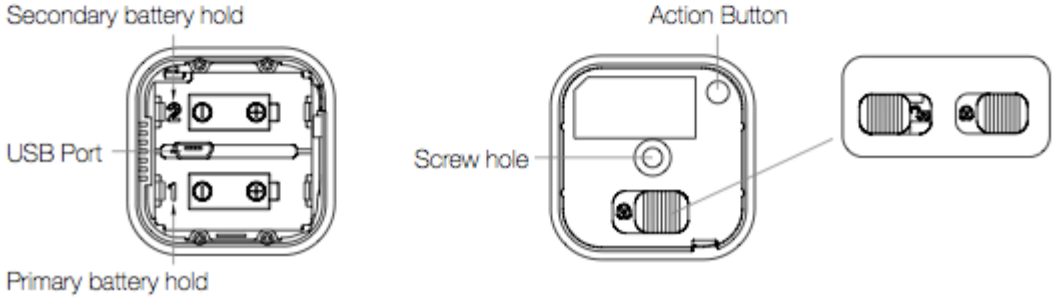

Important safety information.

Please read this and other device guides carefully. Failure to follow the recommendations set forth by Aeotec Limited may be dangerous or cause a violation of the law. The manufacturer, importer, distributor, and/or reseller will not be held responsible for any loss or damage resulting from not following any instructions in this guide or in other materials.

MultiSensor 6 is intended for use in dry locations only. Do not use in damp, moist, and/or wet locations.

Do not use rechargable CR123A batteries.

Keep product and batteries away from open flames and extreme heat. Avoid direct sun light or heat exposure. Always remove all batteries from products that are being stored and not used. Batteries may damage the appliance if they leak. Do not use rechargeable batteries. Ensure correct polarity when inserting the batteries. Improper battery use may damage the product.

Contains small parts; keep away from children.

Quick Start.

Set Up Your Power

MultiSensor 6 can be powered by battery or by USB with an appropriate adapter. For the purposes of installation and setup, even if you intend to power your sensor with batteries, we recommend using the provided USB cable for setup. For this, you'll need an adapter to plug your USB cable into; this can include any computer USB port and most smartphone chargers. These steps can be performed in any location within your home, and not necessarily in your MultiSensor 6's final installation location.

For a USB powered installation:

1. Remove the battery cover by sliding the Unlock button and separating the two parts of your Sensor.

2. Insert the smaller end of the provided USB cable into your sensor's USB port.

3. Insert the larger end of the USB cable into a computer or adapter. Your MultiSensor 6 is now powered on.

4. Make sure to seat the Battery Cover back onto the MultiSensor 6 and lock it in.

For a battery powered installation:

1. Remove your sensor's rear cover as shown in the previous step.

2. Insert two CR123A batteries orientated according to the diagram within your sensor. Your MultiSensor 6 is now powered on.

Note: MultiSensor 6 can be powered by a single CR123A, though batteries will require changing more frequently. If powering your MultiSensor 6 with a sole battery, insert it into the battery holder marked 1.

WARNING: Not compatible to rechargeable CR123A batteries (3.7V)

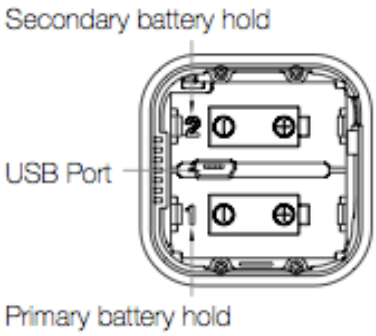

3. Make sure to seat the Battery Cover back onto the MultiSensor 6 and lock it in.

Adding your MultiSensor 6 into a Z-Wave Network.

With it powered on, it's now time to add your MultiSensor 6 to a Z-Wave network. To pair MultiSensor 6, you are not limited to only the Z-Stick or Minimote. You may use any Z-Wave Gateway to pair MultiSensor 6, but compatibility and how the sensor shows ultimately depends on the gateway and software integration of products.

Using an existing gateway:

You may need to refer to your gateway's method of including devices if you do not know how to pair a Z-Wave device.

1. Put your primary Z-Wave gateway into pair mode, your Z-Wave gateway should confirm that it is waiting to add a new device

2. Press the Action Button on your MultiSensor.

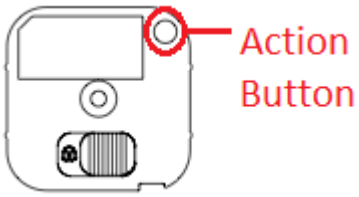

3. The LED on MultiSensor will blink Green rapidly, followed by a solid Green LED for 1 second for successful inclusion, or a solid red LED for 1 second for a failed inclusion.

SmartThings pair steps.

Connect MultiSensor 6 to SmartThings (https://aeotec.freshdesk.com/support/solutions/articles/6000231561-setup-multisensor-6-zw100-with-smartthings-) using SmartThings' Connect app, follow the dedicated instructions available at that link.

Choosing a Location for your MultiSensor.

MultiSensor 6 can bring its intelligent readings to many locations of your home. Before deciding on a location, there are some things you should first consider.

MultiSensor 6's motion sensor uses light and heat readings to determine motion; sudden light and heating changes can impact the sensor's quality of motion readings. As such, your sensor should not be installed in areas of artificial temperature change. Thus, when selecting a location, avoid placing it beside or near air conditioners, humidifiers, and heaters, and avoid positioning it directly opposite a window or direct sunlight.

If your MultiSensor 6 will be powered by batteries, you should avoid installing it in a location where the temperature can drop below 0°C / 32°F - this is below the batteries' working point. Selecting a location for your sensor also depends on the layout of any area that you want monitoring. Whatever the room or area, please ensure that it fits with your sensor's effective motion sensing range as described in the following diagrams. If installing MultiSensor 6 on a ceiling it can take measurements within a 3 x 3 x 6 metre / 10 x 9 x 18 feet range:

Note: The wider side of the oval is in the direction of the battery placement from + to -

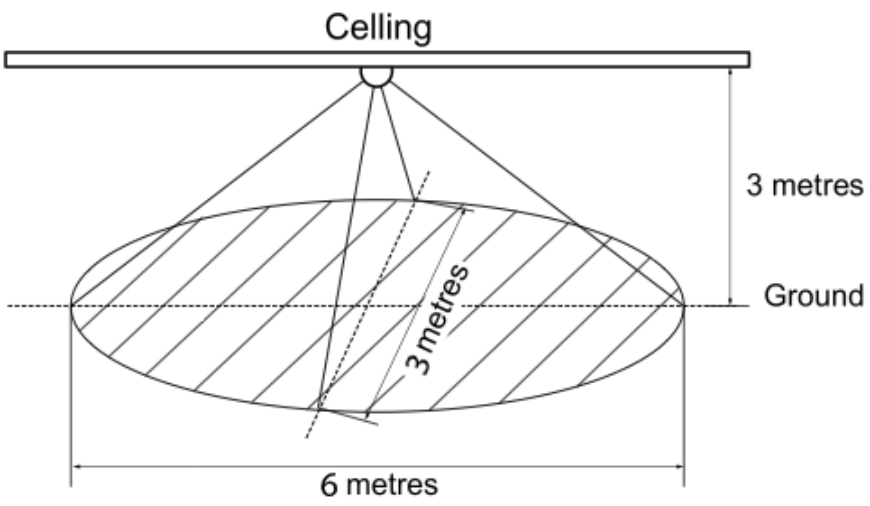

If installing MultiSensor 6 in a corner where the wall meets the ceiling it can take measurements within a 2.5 x 3.5 x 5 metres / 8 x 11 x 15 feet range:

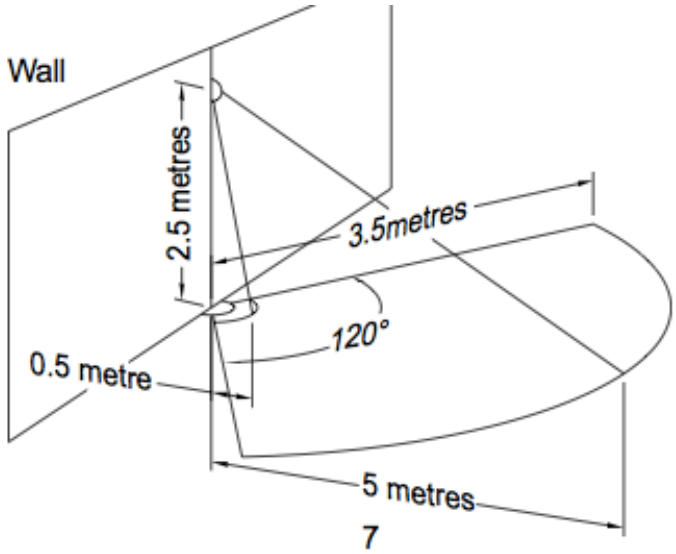

For optimal performance, your MultiSensor 6 should NOT be mounted directly on or near metal framing or other large metallic objects. Large metal objects may weaken the Z-Wave wireless signal MultiSensor 6 depends on for communication due to the wireless reflective properties of any metal.

Physically install your MultiSensor.

With your MultiSensor 6 now a part of your Z-Wave network and having determined its installation location, it's time to finish its physical installation. There are 2 ways that your MultiSensor 6 can be mounted on a wall or ceiling. Most simply it can be placed upon a shelf without the need to attach further accessories. You can mount your sensor in a corner or against a wall or ceiling by using the Back-Mount Plate. It's also possible to embed your MultiSensor 6 within a ceiling or wall using

its Recessor accessory (sold separately).
To install your MultiSensor 6;

Reattach the three parts of your MultiSensor to each other. Unlock the Battery Cover from the Sensor unit.

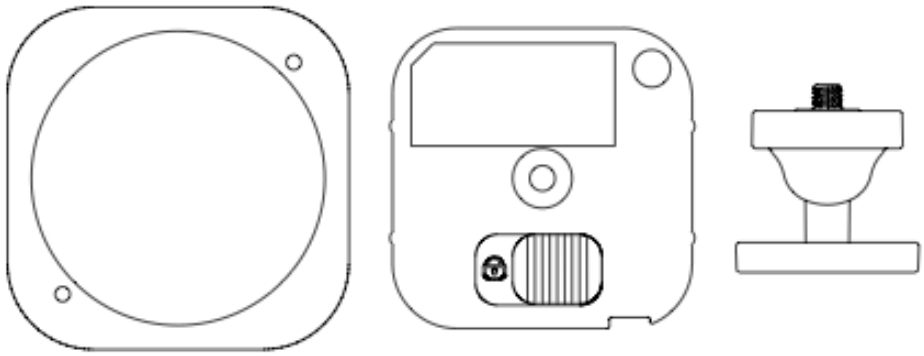

You may also install your Multisensor 6 on any flat surface area such as tables, and bookshelves;

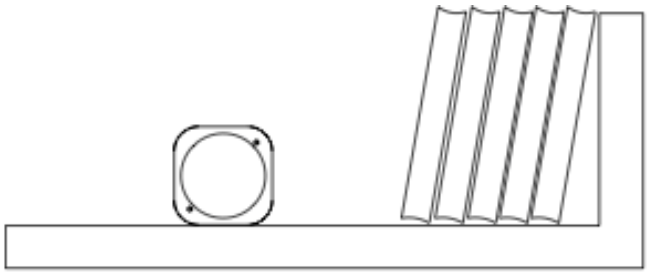

You can place it upon a shelf without the need to attach further accessories.

To install your MultiSensor 6 with the Back-Mount Plate;

1. You can affix the Back-Mount Arm by Double-Sided Tape or using the provided KA2.5×20 mm screws.

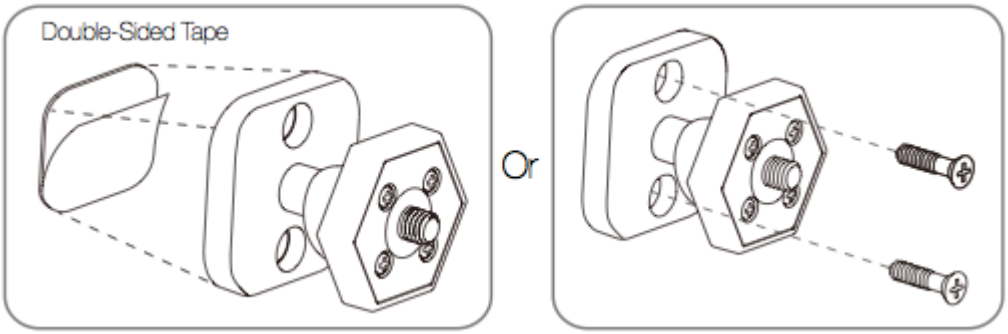

Tips: We suggest you choose the second method (using screws to affix the Back-Mount Arm) would be more stable.

2. After you have completed the affixing of Back-Mount Arm, you will need to lock MultiSensor to the Back-Mount Arm by screwing MultiSensor in.

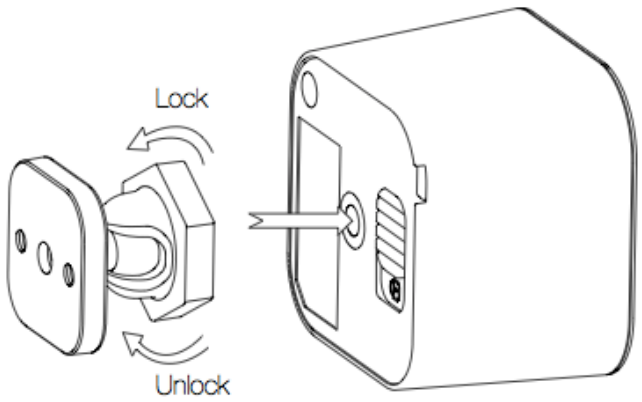

3. The Back-Mount Arm may be locked at various angles by turning the Friction Lock clockwise and counter-clockwise to respectively tighten or loosen the angle of the arm. You can rotate the Friction Lock to change the measurement area of sensor.

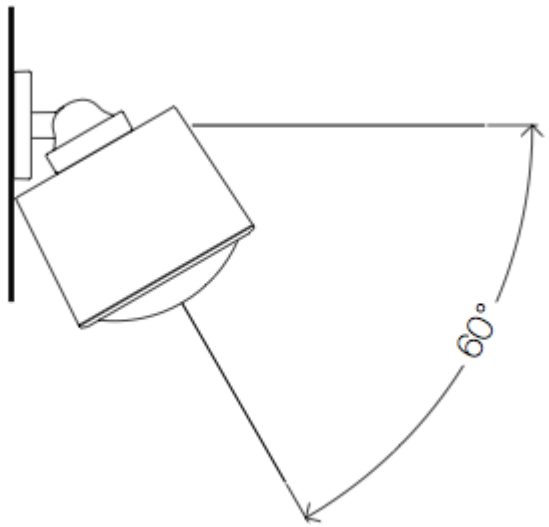

Advanced Functions.

Your MultiSensor has built-in battery level detection. It will automatically report its battery level to the associated controller/gateway throughout its life until the battery is fully drained and needs replacing. The battery status will often be displayed in the user interface of the controller/ gateway. When used properly in an optimised Z-Wave network, your MultiSensor can be powered by batteries for 24 months before battery replacement is necessary.

Recommendation: For networks which do not offer a method to display

the battery level of your MultiSensor, it is recommended that the sensor be tested occasionally to ensure that the batteries still hold enough charge to operate. Batteries naturally lose their charge over time.

Outdoor installation.

Please note that when installing outdoors of your home, your MultiSensor should only be relied on for temperature, light, humidity, and ultraviolet readings, whereas the motion-sensing capabilities should be disabled on your gateway in order to avoid false motion readings. If selecting an outdoor location, it's important to position your MultiSensor in a sheltered location. It is best if your MultiSensor is not directly exposed to rain, and is important that the humidity venting on your MultiSensor never is.

If you wish to use MultiSensor 6 outdoors, you will need to lower settings, and angle MultiSensor 6 accordingly as all environments will require different solutions or different settings for the motion sensor to work properly. Parameter 4 [1 byte] will determine the sensitivity of the motion sensor from a value range of 0 disabled to 5 max sensitivity (your ability to configure this setting will depend on the gateway used).

It is advised that if you are seeing false motion tracking, run trial and error to determine the best sensitivity from a range of 0 - 5 by going down 1 sensitivity level after every test (first 5, 4, 3, 2, then 1), while setting Parameter 3 [2 byte] to 10 to allow a PIR sensor timeout of 10 seconds after detecting motion to rapidly determine the best settings for motion use outdoors.

Removing your MultiSensor from Z-Wave Network.

Your MultiSensor can be removed from your Z-Wave network at any time. You'll need to use your Z-Wave network's main controller to do this and the following instructions tell you how to do this. If you are using other products as your main Z-Wave controller, please refer to the part of their respective manuals that tells you how remove devices from your network.

Using an existing gateway:

You may need to refer to your gateway's method of including devices if you do not know how to pair a Z-Wave device. You may use any gateway to perform an unpair/removal on MultiSensor 6 even if they are not paired together to factory reset MultiSensor 6.

1. Put your primary Z-Wave gateway into unpair mode, your Z-Wave gateway should confirm that it is waiting to remove a device

2. Press the Action Button on your MultiSensor.

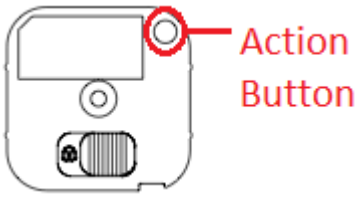

3. If your MultiSensor has been successfully removed from your network, the RGB LED will be active with a colourful gradient for 3 seconds.

When you press the Action Button on MultiSensor, its green LED will blink rapidly to indicate it has entered pair mode.

If the removal was unsuccessful, the green LED will stay solid for a few seconds when you press the Action Button.

Monitoring motion.

MultiSensor can send Basic Set Command to association group 1, which is setup via the Association Command Class, when Motion Sensor detects movement to control the associated devices to “OPEN” state. After 4 minutes by default, if the Motion Sensor is not triggered again, MultiSensor will send Basic Set Command to these devices to set them to their “CLOSE” state. However, if Motion Sensor is triggered again within 4 minutes, MultiSensor will reset the timing and start timing again.

Waking up MultiSensor 6.

In order to configure MultiSensor 6, you must either (1) wake up MultiSensor 6 using the below button press function, or (2) temporarily put your MultiSensor 6 on USB power.

1. Press and hold MultiSensor 6 Action button

2. Wait until the RGB LED turns into a Yellow/Orange Color

3. Release MultiSensor 6 Action Button

The LED on MultiSensor 6 will now rapidly blink its Yellow/Orange LED while it is in its awake state. You may send in any configurations or commands from your current gateway to configure your MultiSensor 6.

4. Tap the Action Button on MultiSensor 6 to put MultiSensor 6 back to sleep, or wait 10 minutes. (recommended to manually put it back to sleep to conserve battery life).

Testing Health Connectivity.

Note - Health test does not test for routing communication health, only tests for direct communication with your gateway to determine if it has a healthy direct connection.

You can determine the health of your MultiSensor 6s connectivity to your gateway using a manual button press, hold, and release function which is indicated by the LED color.

1. Press and hold MultiSensor 6 Action button

2. Wait until the RGB LED turns into a Purple Color

3. Release MultiSensor 6 Action Button

The RGB LED will blink its Purple color while sending ping messages to your gateway, when it has finished, it will blink 1 of 3 colors:

Red = Bad Health

Yellow = Moderate Health
Green = Great Health

Be sure to watch for the blink, as it will only blink once very quickly.

Manually Factory Reset MultiSensor 6.

This method is not fully advised unless your gateway has failed, and you do not yet have another gateway to perform a general unpair on MultiSensor 6.

1. Press and hold MultiSensor 6 Action button

2. Wait until the RGB LED turns from:

- Yellow
- Purple
- Red - blinks faster and faster
- Green - You can let go here, it will continue to the next (Rainbow Cycle)
- Rainbow Cycle

3. If your MultiSensor has been successfully factory reset from its previous network, the RGB LED will be active with a colourful gradient for 3 seconds. When you press the Action Button on MultiSensor, its green LED will blink. If the removal was unsuccessful, the green LED will stay solid for a few seconds when you press the Action Button.

Additional information on other Gateways uses.

Smartthings Hub.

Smartthings hub has basic compatibility to the MultiSensor 6, it does not allow you to access its advanced configuration functions readily. In order to make full use of your MultiSensor 6 to its fullest, you must install a custom device handler in order to access other functions of the switch.

You can find the article for the custom device handler here: **https://aeotec.freshdesk.com/solution/articles/6000063247-using-multisensor-6-with-smartthings-hub-s-custom-device-type (https://aeotec.freshdesk.com/solution/articles/6000063247-using-multisensor-6-with-smartthings-hub-s-custom-device-type)**

The article contains the github code, and information used to create the article. If you need help installing the custom device handler, please contact support about this.

Troubleshoot your MultiSensor 6.

If you are seeing issues with your MultiSensor 6s multiple sensors, there are a few troubleshooting steps that you can take to make them work depending on if your gateway will allow you to.

- **Troubleshoot Motion Sensor. (https://aeotec.freshdesk.com/solution/articles/6000156713-troubleshoot-multisensor-6-motion-sensor)**

- **Troubleshoot the Multisensors 4 other sensors (Light, Humidity, Temperature, UV). (https://aeotec.freshdesk.com/solution/articles/6000156717-troubleshoot-multisensor-6-sensors-light-humidity-temperature-uv-)**

Firmware update your MultiSensor 6.

You can firmware update your MultiSensor 6 if you are using Windows PC and a Z-Wave USB Adapter (Z-Stick, SmartStick+, UZB1, etc).

It is completely optional to firmware update your MultiSensor 6 and in most cases, it is not needed.

You can find the firmware updates for V1.13 MultiSensor 6 here: **https://aeotec.freshdesk.com/a/solutions/articles/6000036562 (https://aeotec.freshdesk.com/a/solutions/articles/6000036562)**

More Advanced Configurations.

You can find more advanced configurations for MultiSensor 6 in our Engineering Sheet section on our Freshdesk which can be used to integrate Multisensor 6 into a new gateway or software, or use it as a reference for configurations.

1. **Multisensor 6 (V1.06) (https://aeotec.freshdesk.com/helpdesk/attachments/6053297237)**
2. **Multisensor 6 (V1.07) (https://aeotec.freshdesk.com/helpdesk/attachments/6053297238)**
3. **Multisensor 6 (V1.08) (https://aeotec.freshdesk.com/helpdesk/attachments/6053297241)**
4. **Multisensor 6 (V1.13) (https://aeotec.freshdesk.com/helpdesk/attachments/6091430603)**

Preview